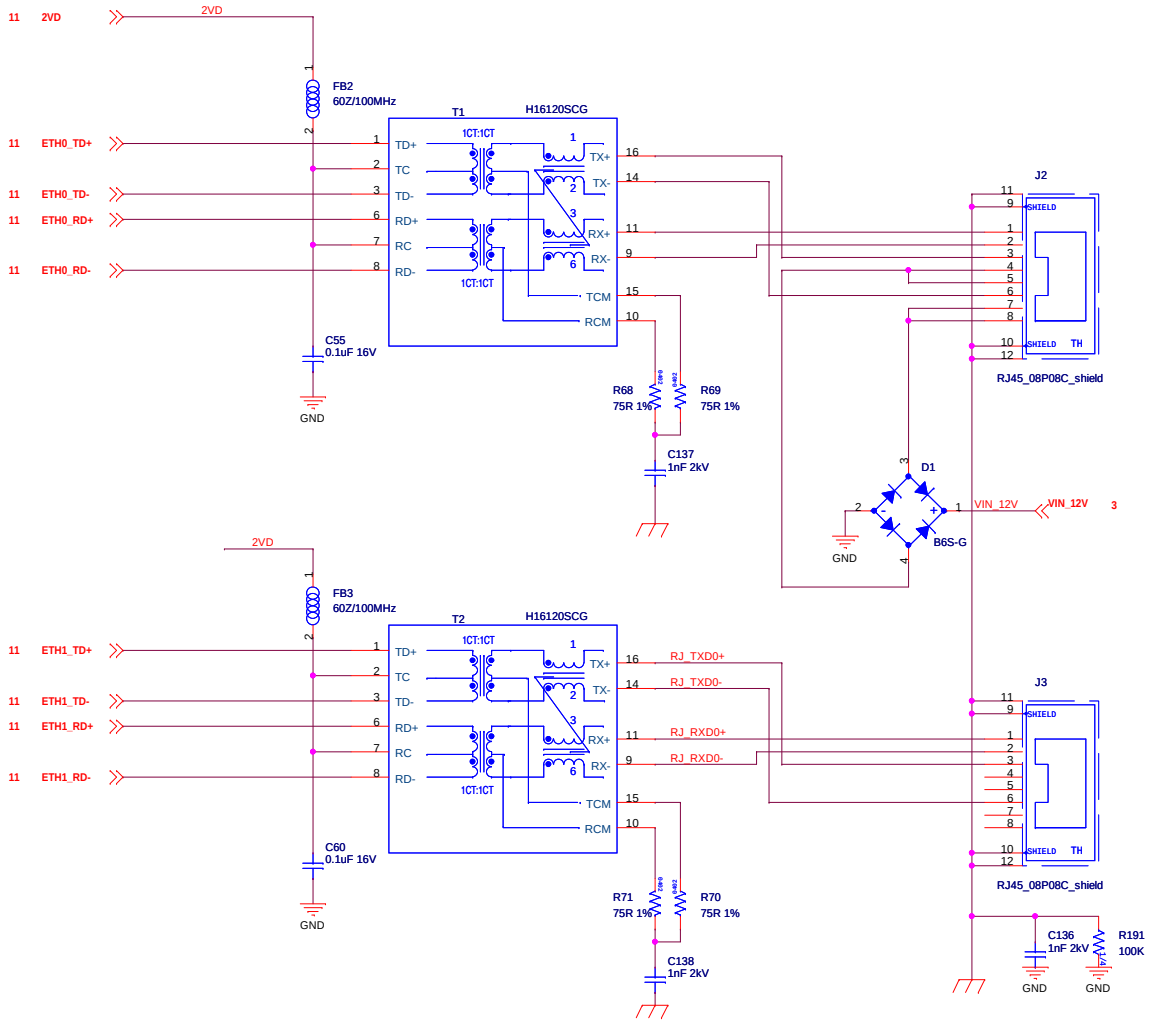

Title	Carambola Main Board	
Size A3	Document Number 8DEV_0101_2	Rev 2.0
Date: Thursday, July 28, 2011	Sheet 1 of 3	

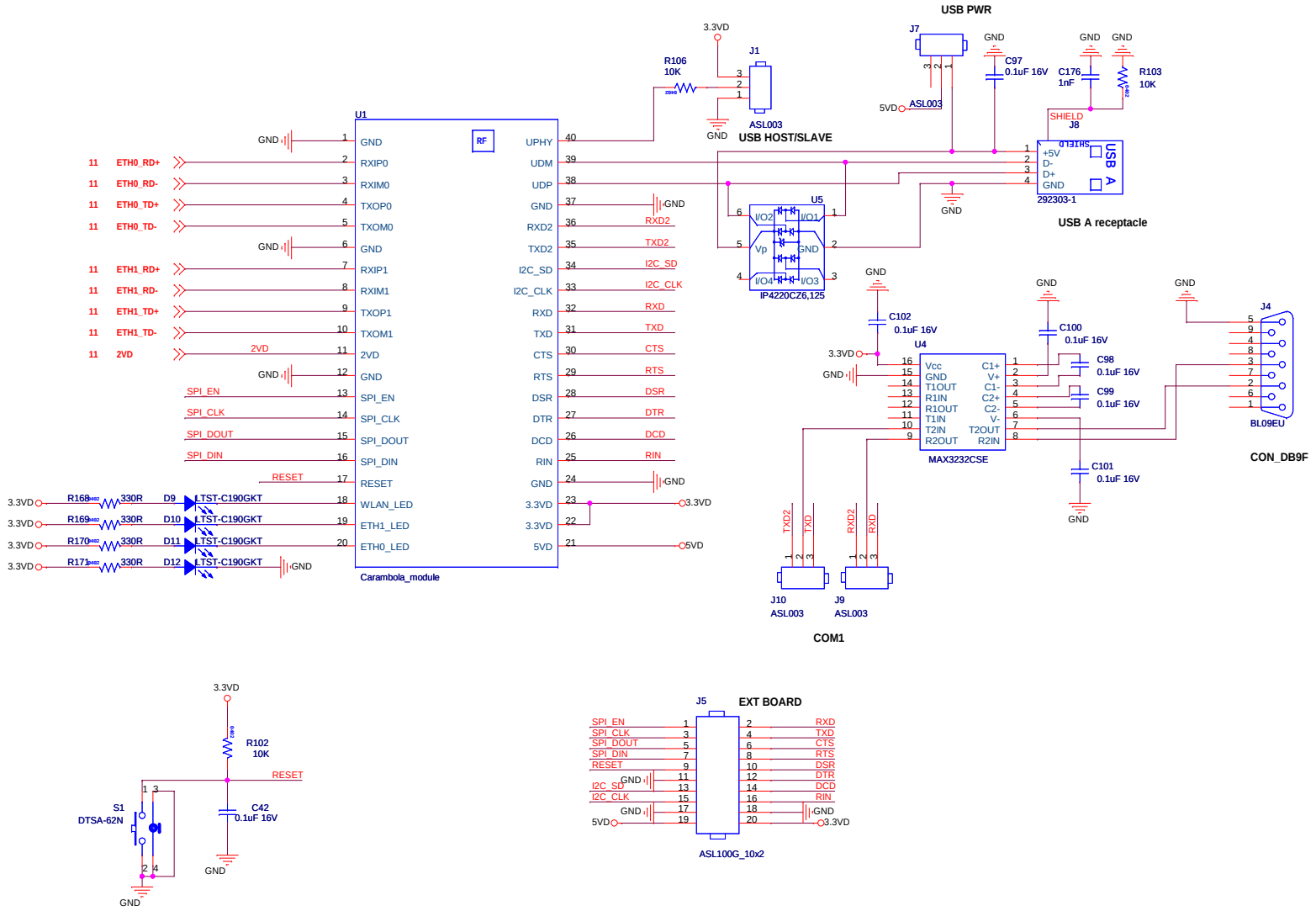

Title	carambola module		
Size A3	Document Number 8DEV_0101_2		Rev 2.0
Date: Tuesday, November 15, 2011	Sheet 2 of 3		

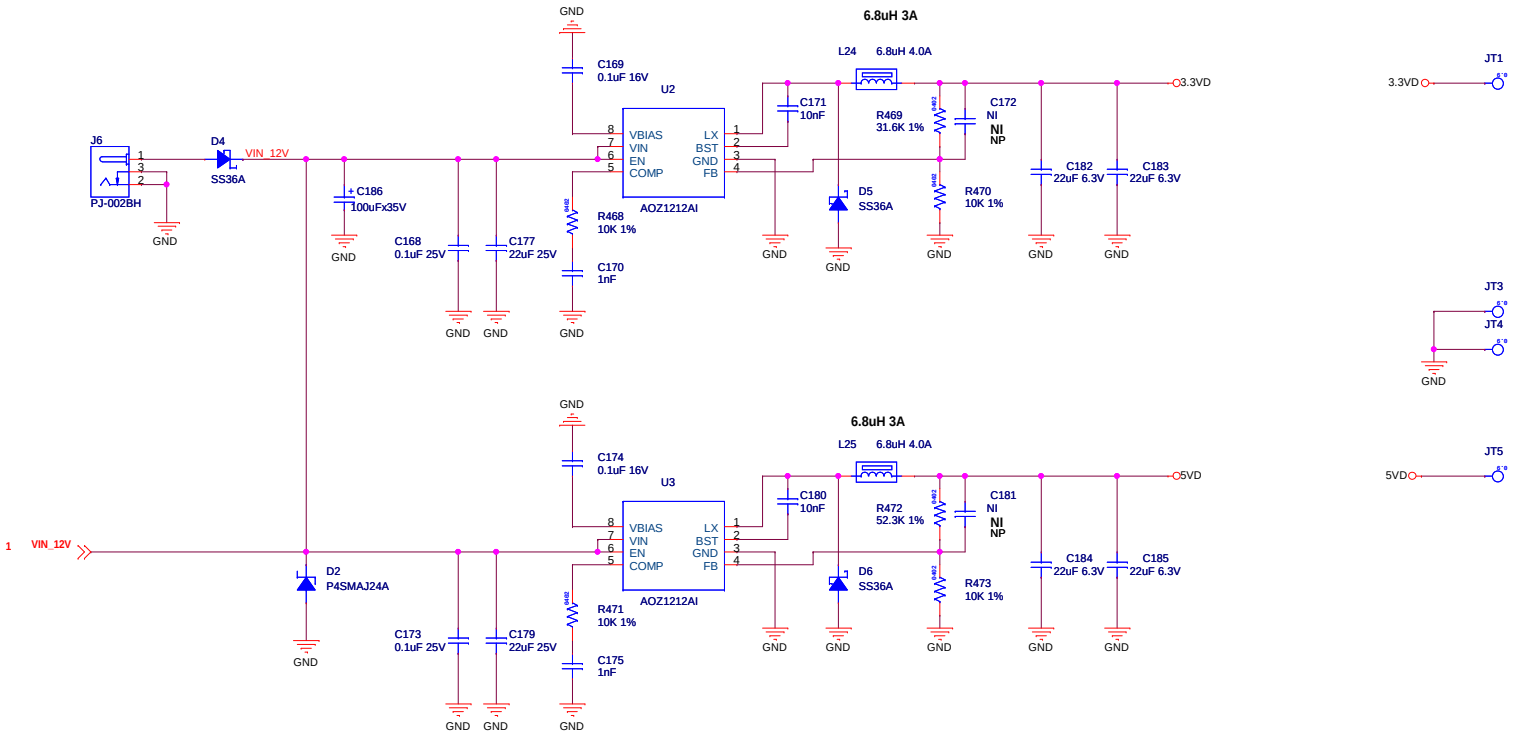

Title	Carambola Main Board		
Size A3	Document Number 8DEV_0101_2		Rev 2.0
Date: Thursday, July 28, 2011	Sheet 3 of 3		